Strip-Curtains.com

In-Tube Motorized
All Season Roll-Up Doors

WALL MOUNTING METHOD
INSTALLATION INSTRUCTIONS

READ THIS FIRST

Carefully examine the crate(s) for damage before opening. If the carton is damaged, immediately notify shipping company. Open the carton(s) and remove all protective packaging. Retain the shipping carton(s) until the unit(s) is installed and properly operating. Strip-Curtains.com is not responsible for delayed or late claims.

Serial No: _____ Model #: _____ Date Purchased: _____

Warning

To Reduce the Risk of Fire, Electrical Shock, or Injury, Observe the Following:

- Use this unit only in the manner intended by the manufacturer. If you have any questions, contact the manufacturer.
- Installation work must be done by a qualified person(s) in accordance with all applicable codes and standards.
- When cutting or drilling into wall or ceiling, do not damage electrical wiring and other hidden utilities.
- All electrical work should be performed in accordance with local and state building codes. If you are in doubt of proper wiring installation, we recommend acquiring the services of a certified electrician.

Read and Save These Instructions

Please read the "READ THIS FIRST" note on the front cover of this manual before proceeding.

IMPORTANT NOTE

If the Screen-Pro was ordered with optional electrical components and accessories (door switch, control panels, mounting brackets, etc), the accessories may be found in an additional box. Check all of the boxes before disposing

TYPES OF DOORS

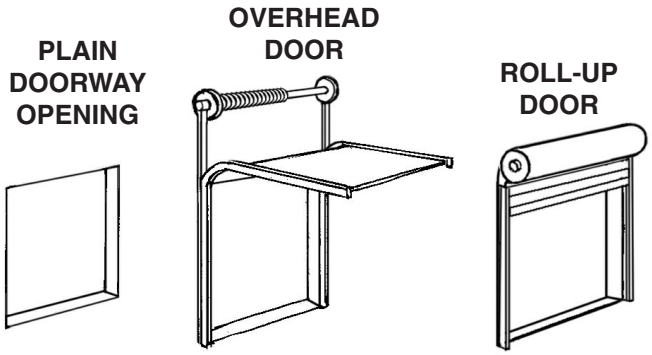

There are a variety of doors used at both industrial and commercial facilities. Each has its specific opening/closing mechanism. This Screen-Pro unit has been shipped with hardware to accommodate a Wall Mounting Method. The Guide Tracks should be mounted flush against the wall.

SCREEN-PRO COMPONENTS

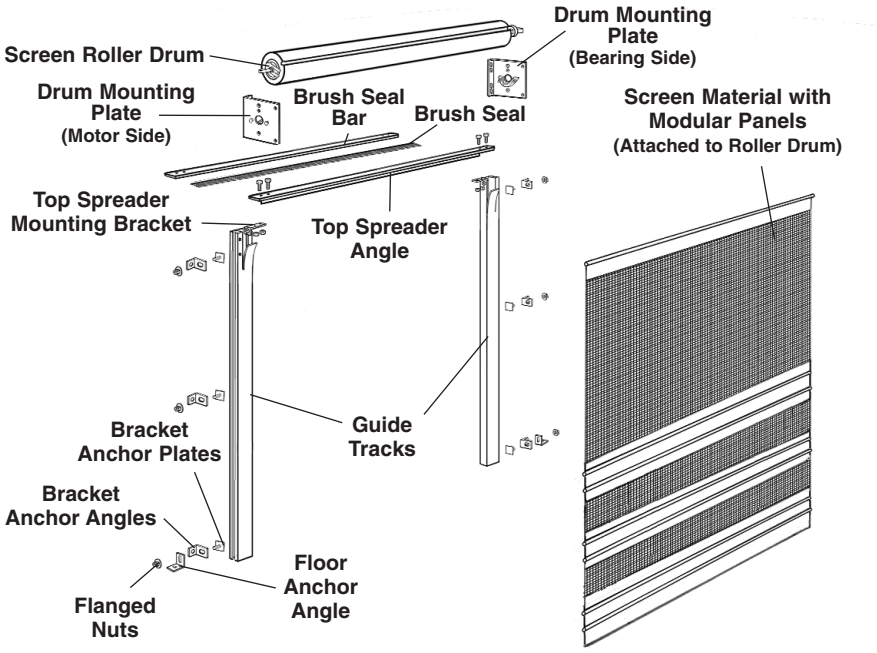

REQUIRED TOOLS

It is recommended that two people install the door together.

The following tools will be needed for installation:

- Carpenter's Level (Min. 4' Length)
- Carpenter's Square
- Hammer Drill
- Masonry Drill Bit (For 3/8" Diameter Anchors)
- 3/8" Diameter and Various Wall Anchors
- Assorted Shim Stock
- Socket and Wrench Set
- Hand Tools
- Four Bar Clamps (36" Long)
- Two Ladders
- Forklift (Supplied by Dealer or Customer)

STEP 1

Lay the basic components in front of the doorway opening. Using work horses will make the assembly process easier although it is not essential.

Slide the Brush Seal into the edge groove of the Brush Seal Bar.

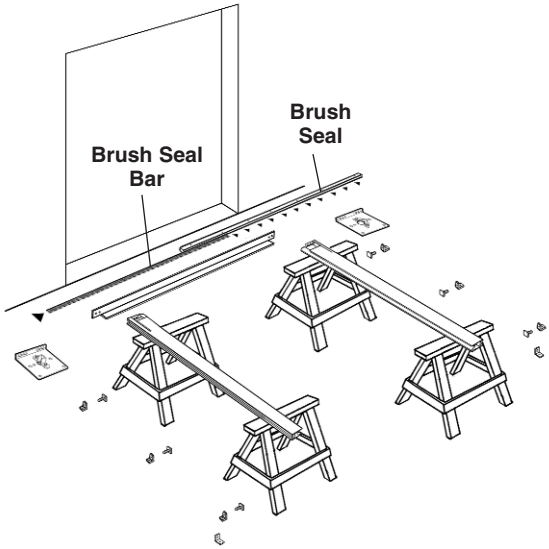

STEP 2

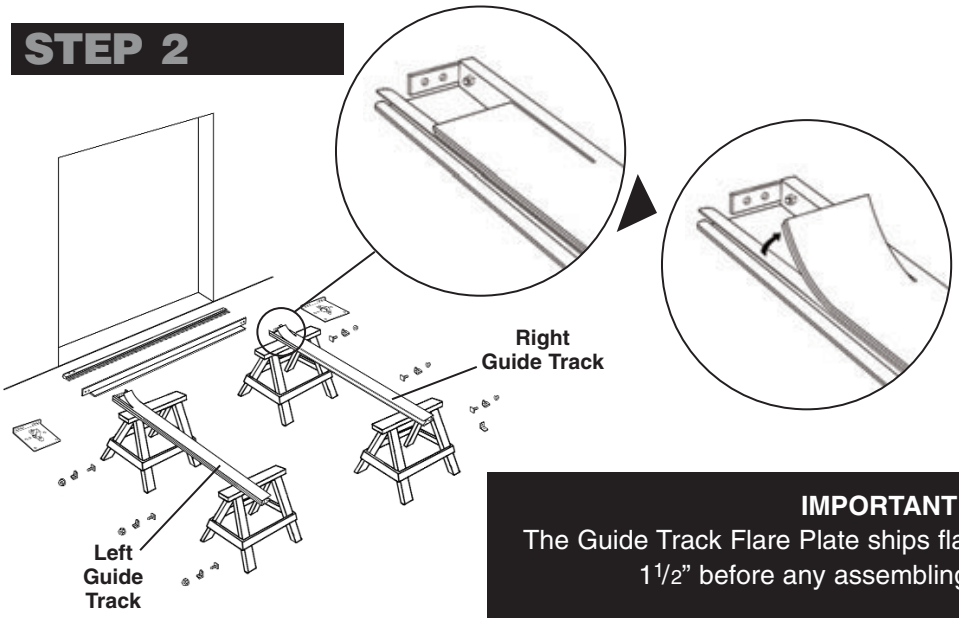

NOTE: There is a left and a right Guide Track.

IMPORTANT
The Guide Track Flare Plate ships flat and must be bent out 1 1/2" before any assembling takes place.

Place the Guide Tracks on the horses with the Guide Flare Plate facing up.

STEP 3

Slide the Bracket Anchor Plates into the guide channel that is on the outside edge of the Track Guides. There are 6 Anchor Plates, 3 for each side on a 10' high door.

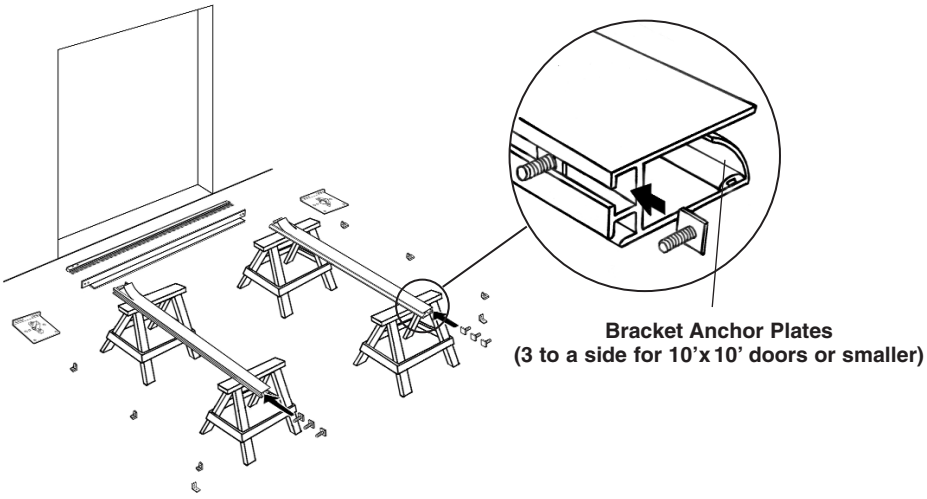

STEP 4

Place a Bracket Anchor Angle on each Bracket Anchor Plate. The top Angle should be 8'' down from the top of the Guide Track The bottom Angle should be 1/4'' from the bottom of the Track. Also, place the Floor Anchor Angle on the bottom Bracket Anchor Plate. The remaining two Angles should be evenly placed between the top and bottom Angles.

NOTE: The oval hole on each Angle should go over the threaded stud.

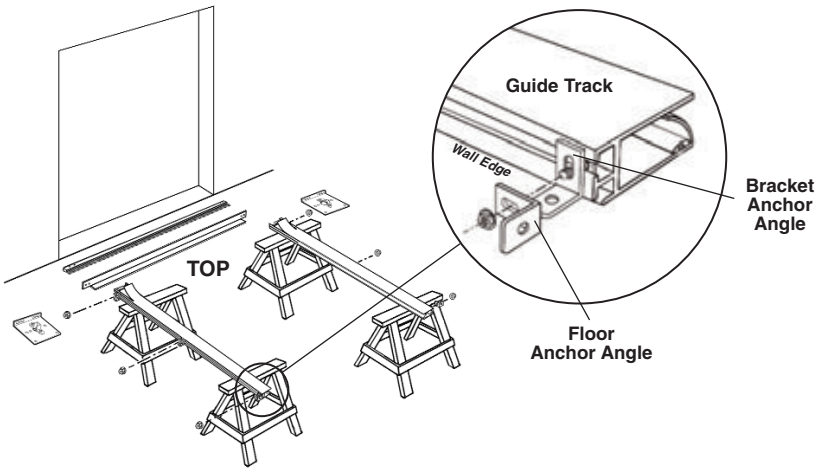

Place a Flange Nut on each Anchor Plate and hand tighten. Use a square to make sure that each Anchor Angle is perpendicular to the Guide Track and flush with the Wall Edge. Also, the bottom of the Floor Anchor Angle is flush with the bottom of the Track. Finally tighten each Flange Nut with a wrench.

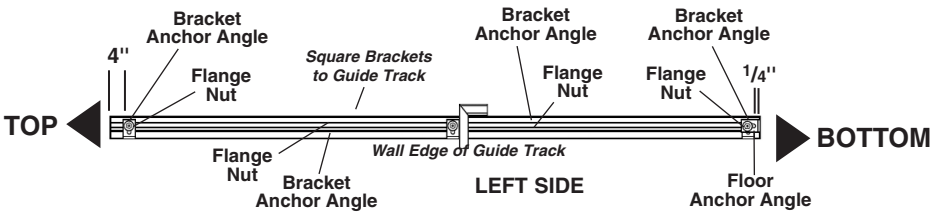

STEP 5

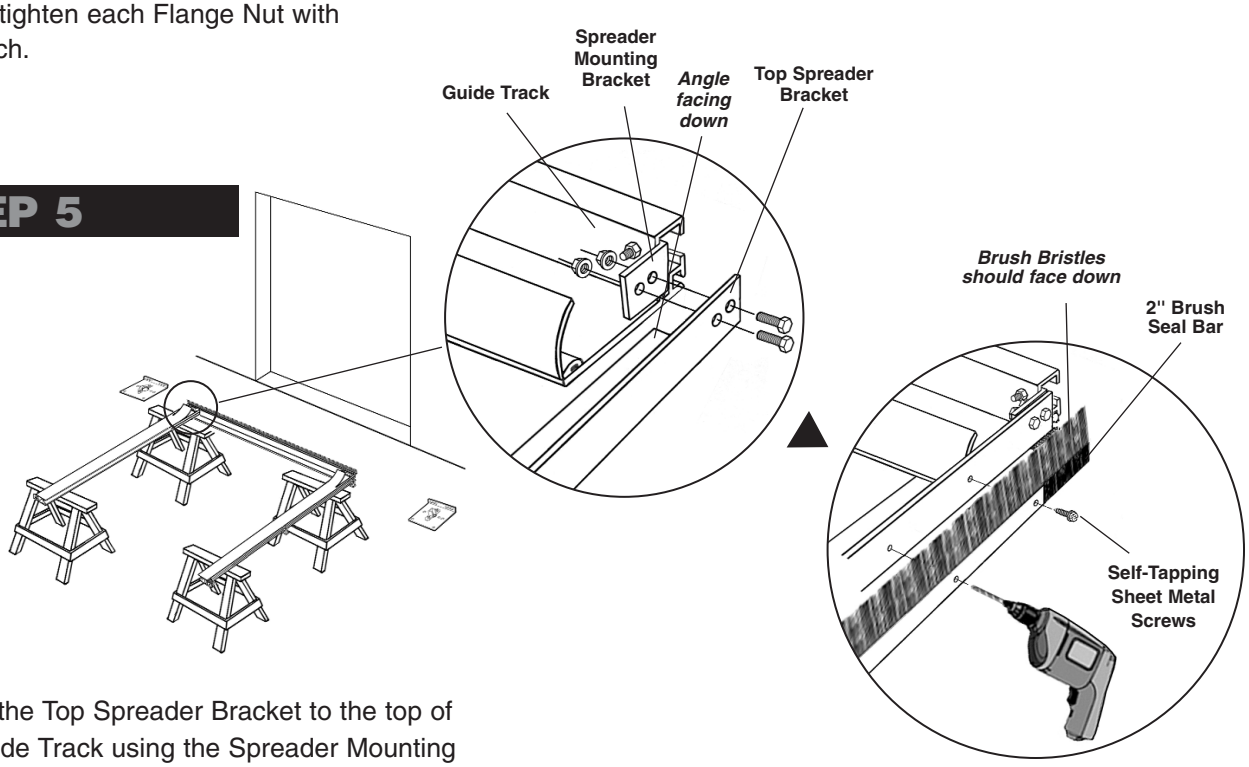

Attach the Top Spreader Bracket to the top of the Guide Track using the Spreader Mounting Bracket. Make sure the back of the Spreader Angle is facing down and toward the wall.

Use 2 bolts and flange nuts on each side to secure all the components.

Place the 2'' Brush Seal Bar on top of the Spreader Bracket and center it. The brush bristles should be facing in and down. Mark each mounting hole on the Spreader Bracket. Remove the bar and drill small holes.

Replace the bar and secure it with Self-Tapping Sheet Metal Screws.

STEP 6

Attach the Drum Mounting Plates to the top of each Track Guide using 5/16" x 1-1/4" bolts with flange nuts. The “C” Bracket (motor side) goes on the left and the round cradle (bearing side) is on the right.

IMPORTANT: Use the bottom hole of each set of holes.

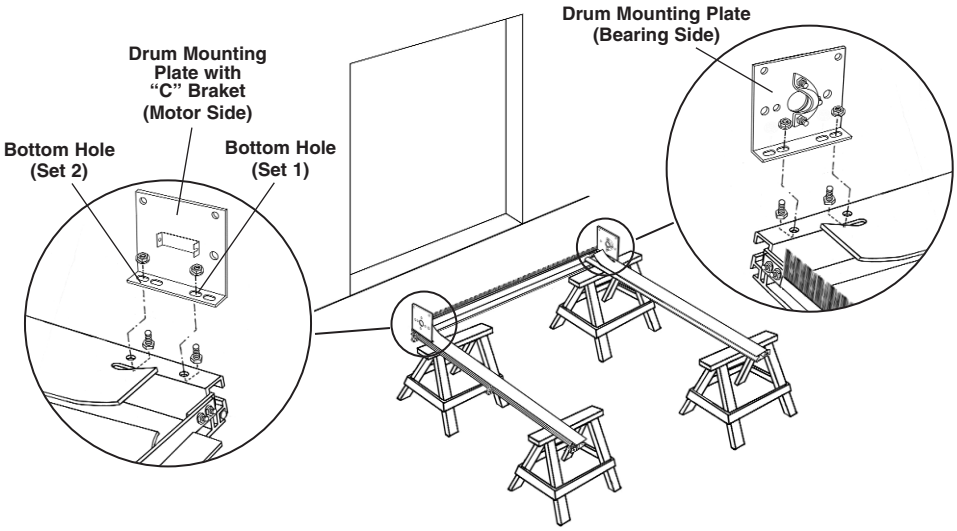

STEP 7

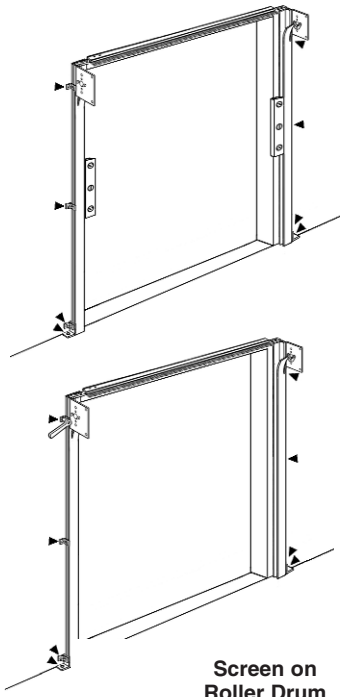

Using a helper, swing the assembly into place and center it on the doorway opening. The bottom of the Guide Tracks should be on the floor and the Bracket Anchor Angles should be flush against the wall. Make sure that each Guide Track is plumb. Mark each of the holes including the Floor Anchor Brackets.

Remove the assembly and drill the holes. If the wall is concrete or cement block, a wall anchor will be necessary.

Then replace the assembly and secure it to the wall using lag screws.

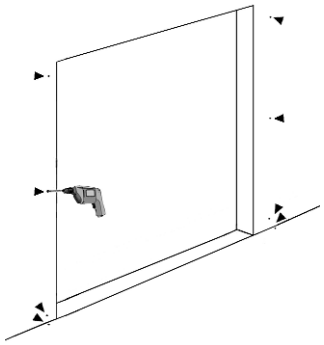

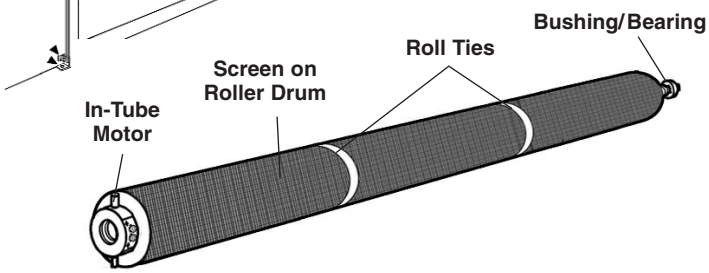

WARNING

DO NOT remove the Roll Ties until the Roll Tube is secured to both Drum Mounting Plates.

STEP 8

Place the Screen Roller Drum into each Drum Mounting Plate. The In-Tube Motor should be to the left and the Bearing to the right. Also the Bottom Edge of the Screen should be facing down. **NOTE**: In-Tube Motor comes standard on left side, unless ordered for right side.

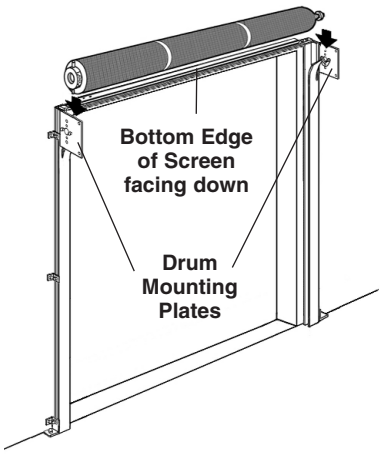

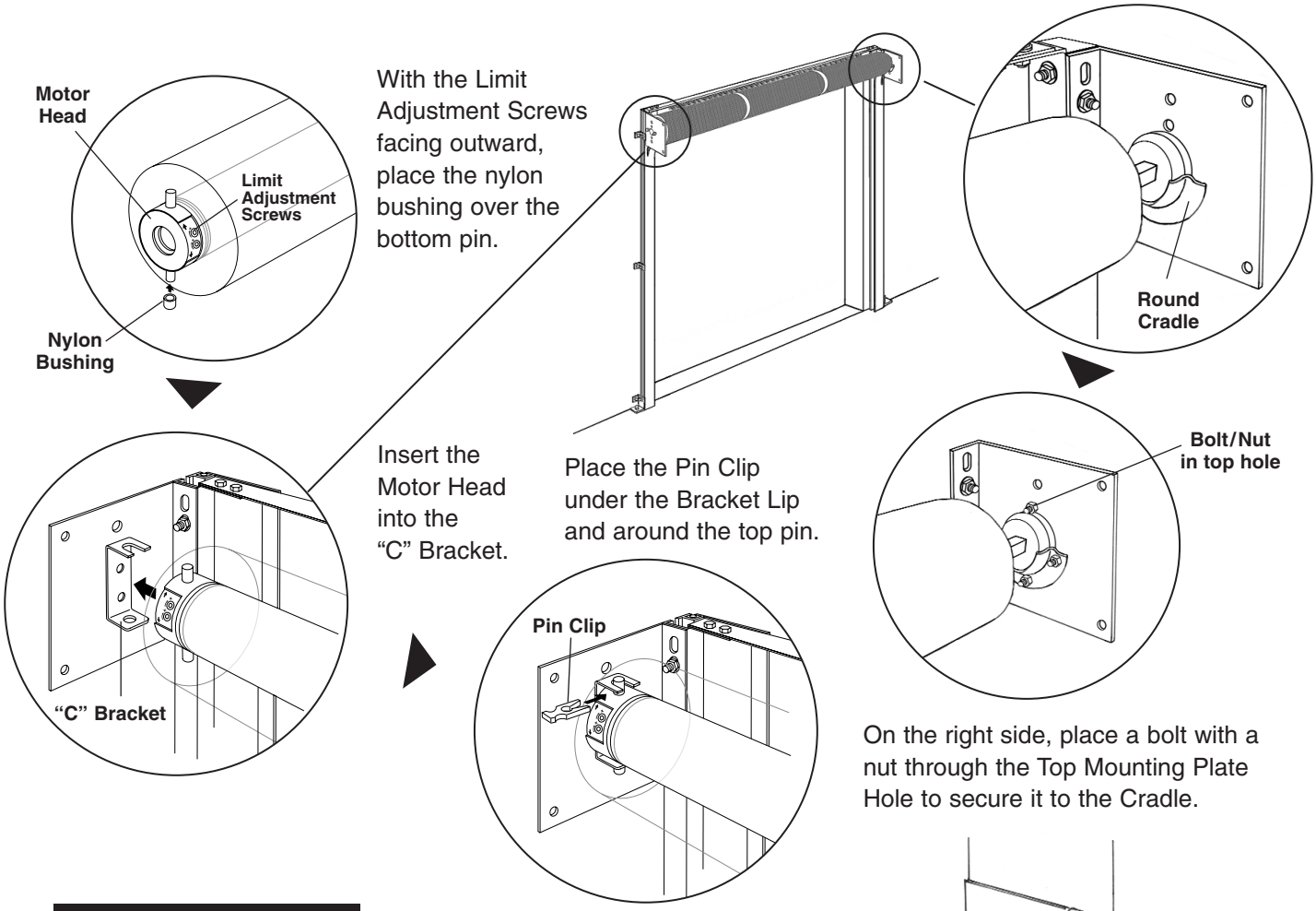

On the right side, place a bolt with a nut through the Top Mounting Plate Hole to secure it to the Cradle.

STEP 9

Then carefully cut the Roll Ties without cutting the screen. Slip the bottom edge of the screen into the Guide Tracks. Place the leading edge in front of the Rubber Gasket to create a seal.

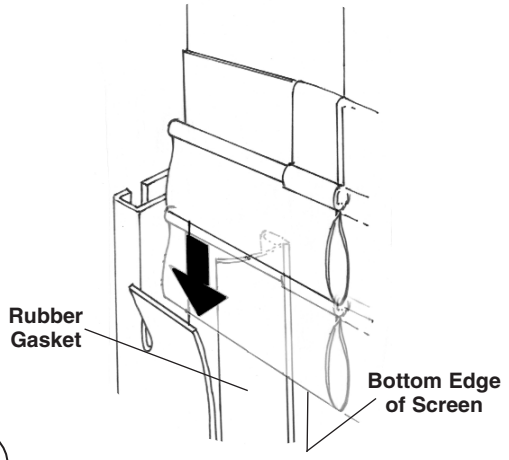

STEP 10

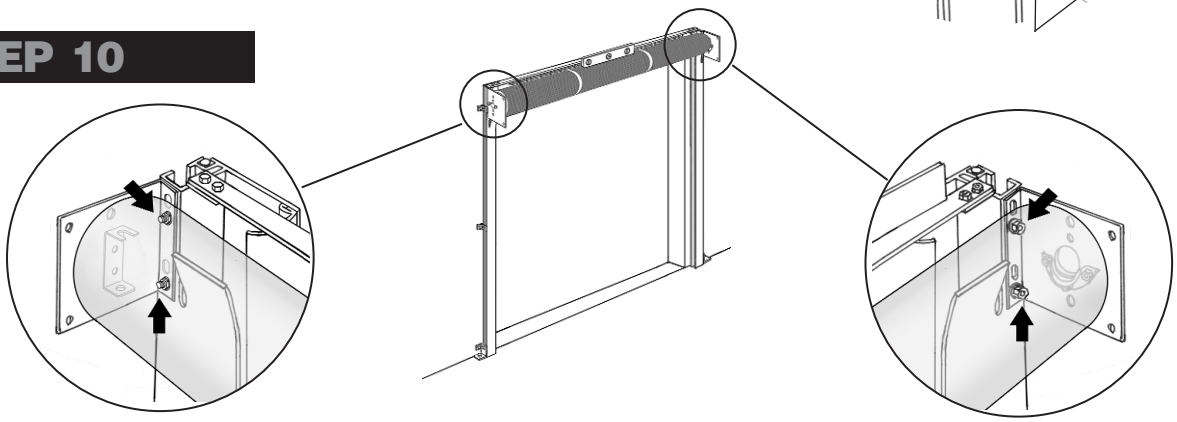

At this point the Screen Roller Drum must be leveled. The Drum Bracket Mounting Bolts on one or both sides can be loosened and the drum can be accurately leveled.

STEP 11

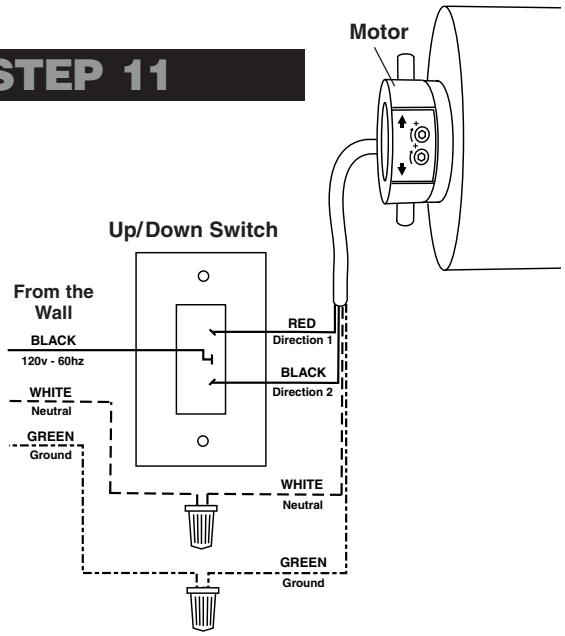

IMPORTANT

All electrical work should be performed in accordance with local and state building codes. If you are in doubt of proper wiring installation, we recommend acquiring the services of a certified electrician.

Next, the motor should be connected to a 120 v, 60 hz power source. The location of the Up/ Down Switch is up to the installer but it should be convenient for the operator. Follow the wiring diagram to the right.

STEP 16

Set the up limit and the down limit. Use the supplied Black Plastic Tool to set the limits.

Note: The screw on top sets the “Down/Lower” limit. The switch on the bottom sets the “Up/Top” limit. Material should roll off the back side of barrel towards the wall.

Important: The large arrows on the far left of the drum by the limit adjustment screws refer to the drum rotation.

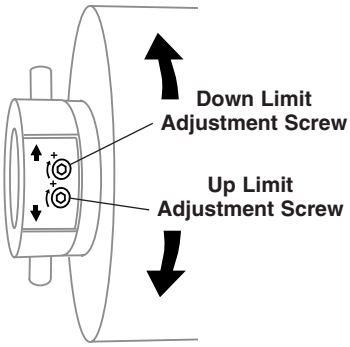

– NOTE –

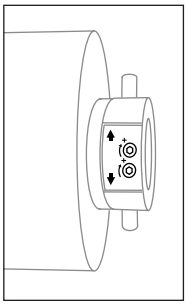

Some models have the motor on the right but the limit adjustment screw configuration and graphics are the same as the more common left motor positioning.

A. It is important to note that the arrows by the limit adjustment screw refer to the drum rotation. The door panel comes off the tube on the back side and the limit adjustment faces the front of the door assembly.

B. Turning an adjustment screw clockwise will increase the maximum travel in the direction that it controls, and turning it counterclockwise will decrease the maximum travel.

C. To set a limit, run the motor in the selected direction.

D. If the motor stops on its own before reaching the desired stop, turn the appropriate limit screw positive (clockwise). Every 3-4 turns of the limit adjustment screw equals approximately 1” of screen travel. After turning the limit adjustment screw, use the control switch to move the motor to the new limit position.
NOTE: If the motor does not stop on its own before reaching the desired limit, go to Step F.

E. When you are approximately at the desired limit position, use the control switch to run the motor away from the limit, 2’ to 3’ and then back.This will allow you to see precisely where the limits are set. Make small adjustments if required.

F. If the motor does not stop on its own at least 6” before the desired limit position, stop the motor with the control switch. Then turn the adjustment screw counterclockwise (negative) direction. Confirm that the motor is at the limit and set the limit as per Steps D & E. If the motor has not stopped at the limit, continue turning the screw counterclockwise (up to 120 turns may be needed).

NOTE: The motor has a built in thermal cut-off. If after several minutes of use the motor will not run in either direction, allow the motor to cool for approximately 20 minutes before using again.

NOTES